2023

Eva Foam Designing and Application

LEROTEC S.R.L.

Contents of Work Steps

PRELINIMARY PATTERNS	As a initial job, prelinimiary patterns will be taken at first day.
DIGITILASION OF PATTERNS	Digitilation and design of the grooves will be finished at second day.
VERIFICATION OF PATTERNS	Designs will be controlled on the deck and all corrections and design approval at third day.
DEFINITIVE DESIGN	All design corrcetions will be applied on the definitive DWG design file at fourth day.
CNC CUTTING	Depending on the final design all pieces will be cut at fifth day.
APPLICATION	Ready pieces will be appied on the deck surfaces after cleaning to finish at sixth day.

The time for material delivery and design decisions will be added to the time for procedures.

Our best features

Reputation

Invest in creating a trustworthy brand and cultivating a positive reputation in order to attract new clients

Professionalism

Maintain professionalism by abiding to standard codes of conduct and only following ethical practices

Creative solutions

Constantly strive to develop innovative solutions that meet customer needs and specific preferences

Communication

Prioritize clear, concise, and timely communication with customers in order to build trust and loyalty

Resources

Maximize resources by streamlining operations, utilizing control tools and reducing errors.

Strategic planning

Combining jobs considering the location to using the time most effective way.

Some Visuals of Earlier Sample Applications

Numerous of people we've had the pleasure of serving. Thank you for your trust!

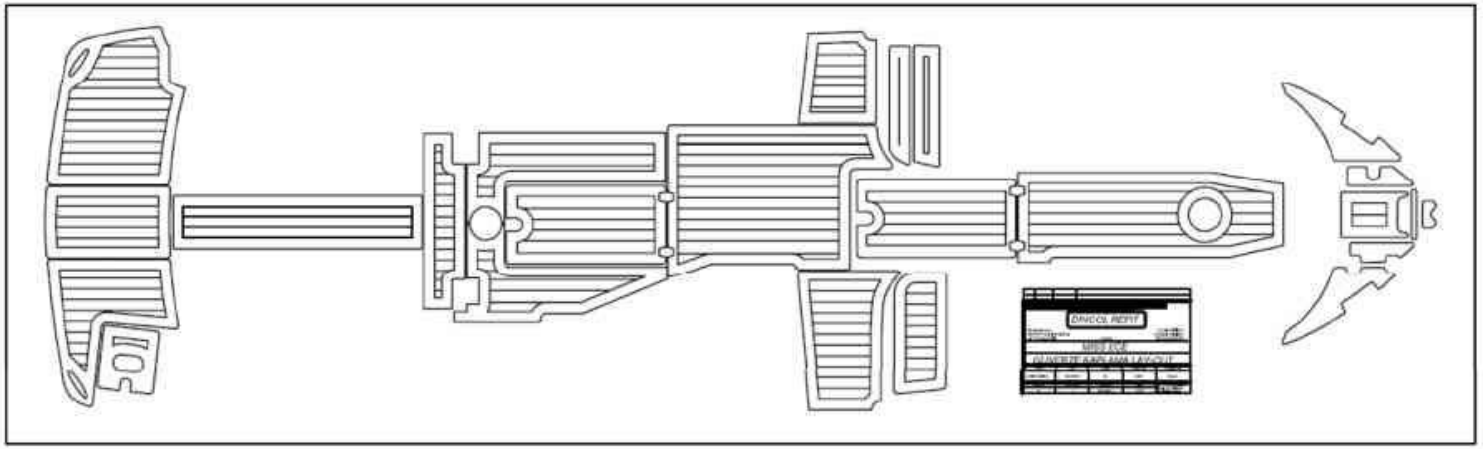

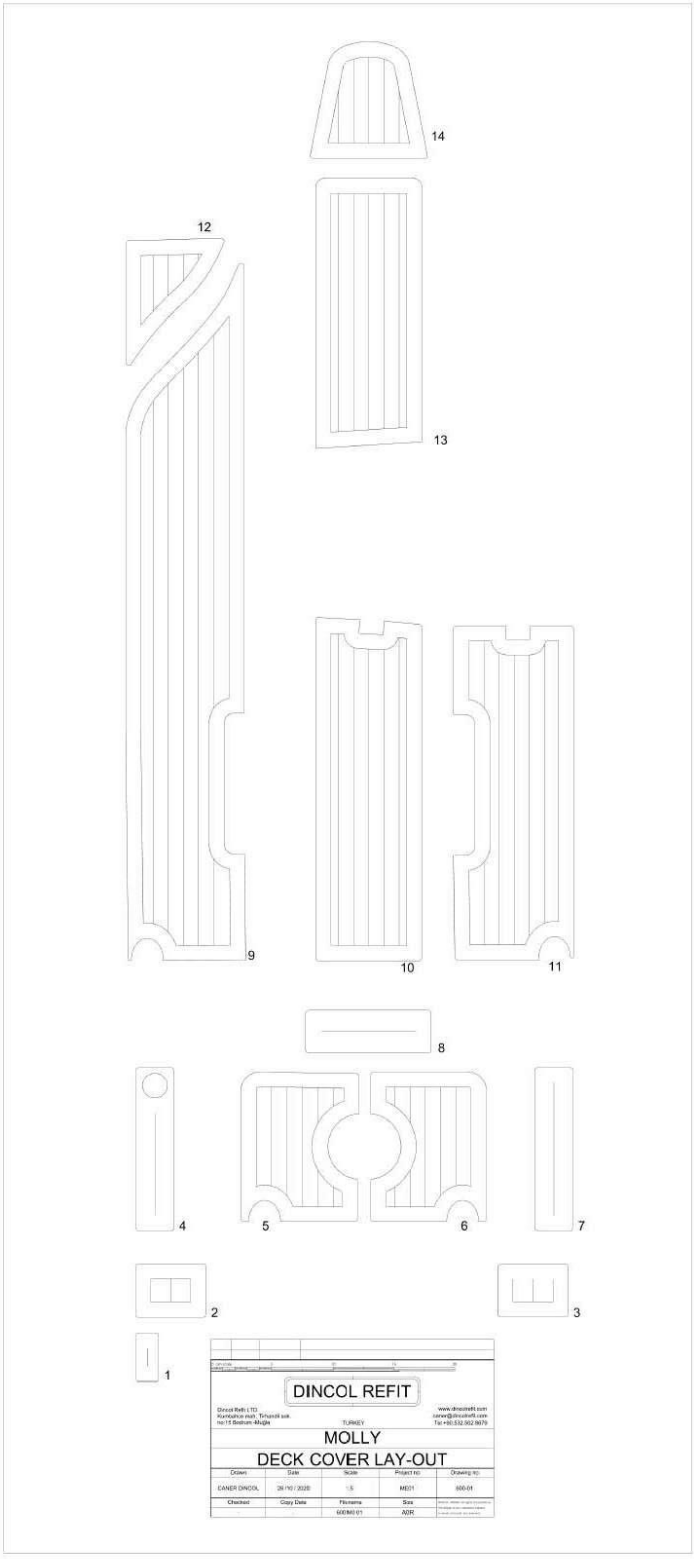
14
12
13
9
10
11
8
4
5
6
7
2
3
1
DINCOL REFIT
TURKEY
MOLLY
DECK COVER LAY-OUT
Drawn
Date
Scale
Project no
Drawing no
CANER DINCOL
26 / 10 / 2020
1:5
M001
000-01
Checked
Copy Date
Filename
Size
000M0101
A0R

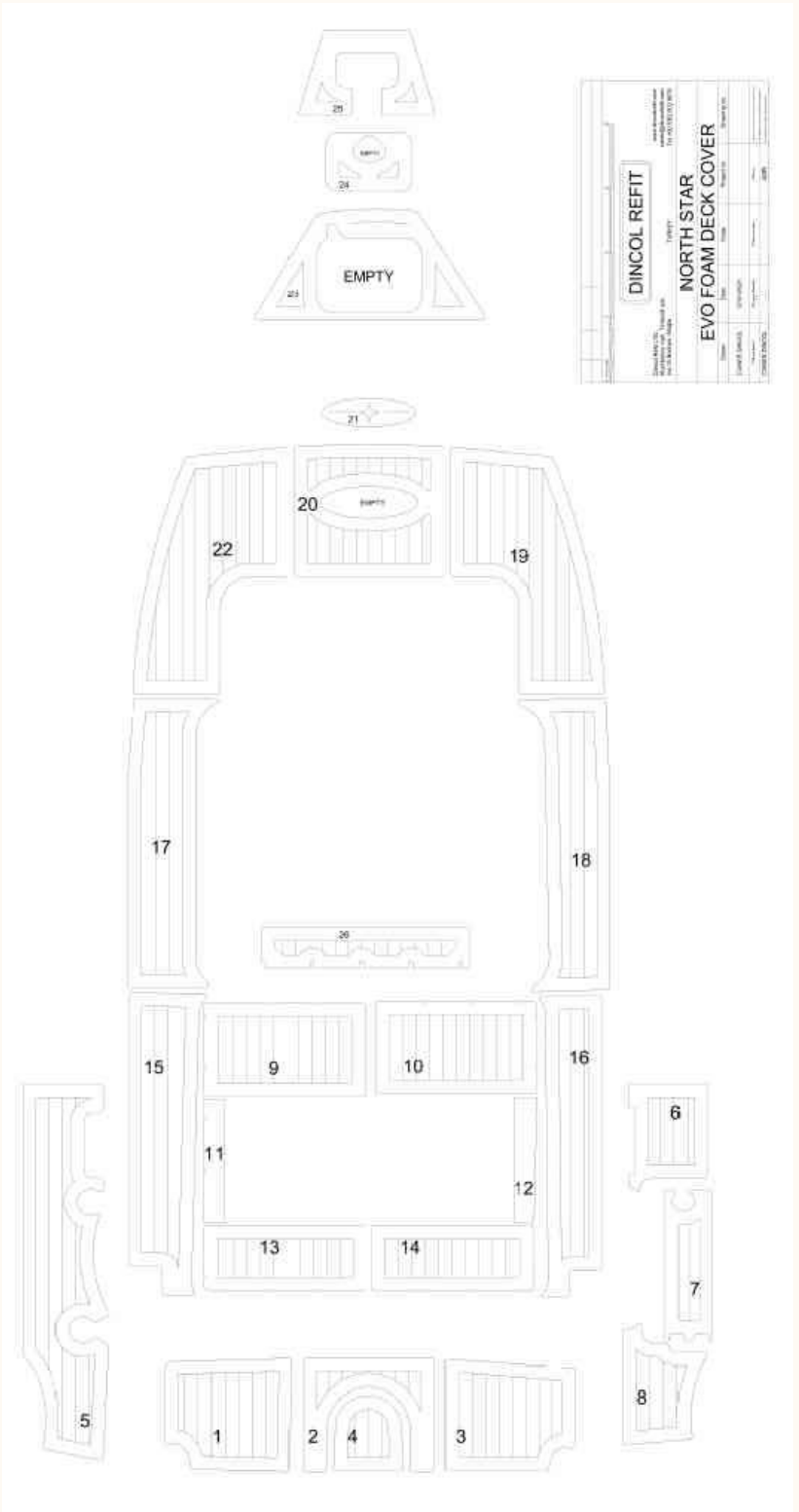
DINCOL REFIT
NORTH STAR
EVO FOAM DECK COVER
EMPTY
25
24
23
21
20
22
19
17
18
26
15
9
10
16
6
11
12
13
14
7
5
1
2
4
3
8

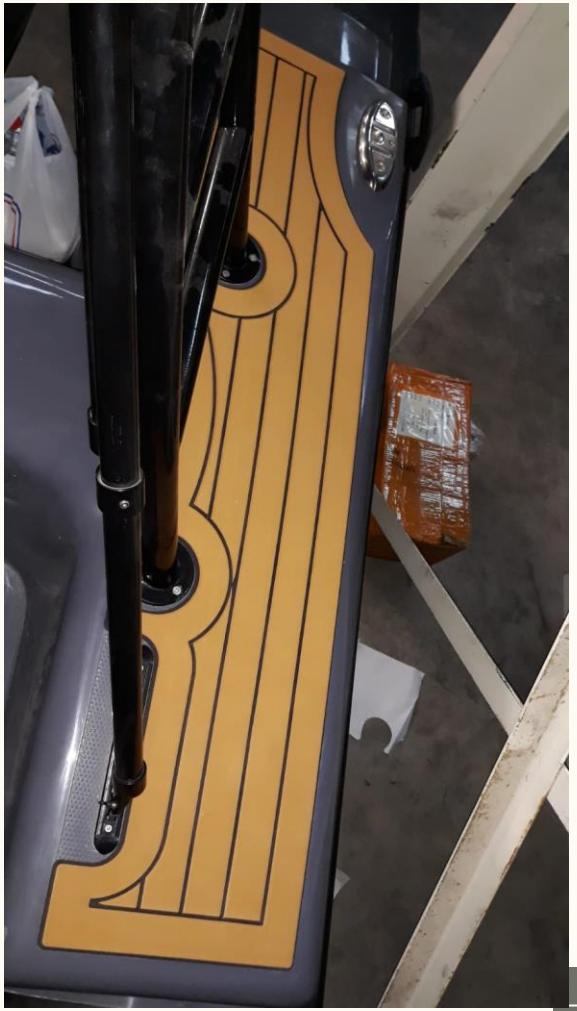

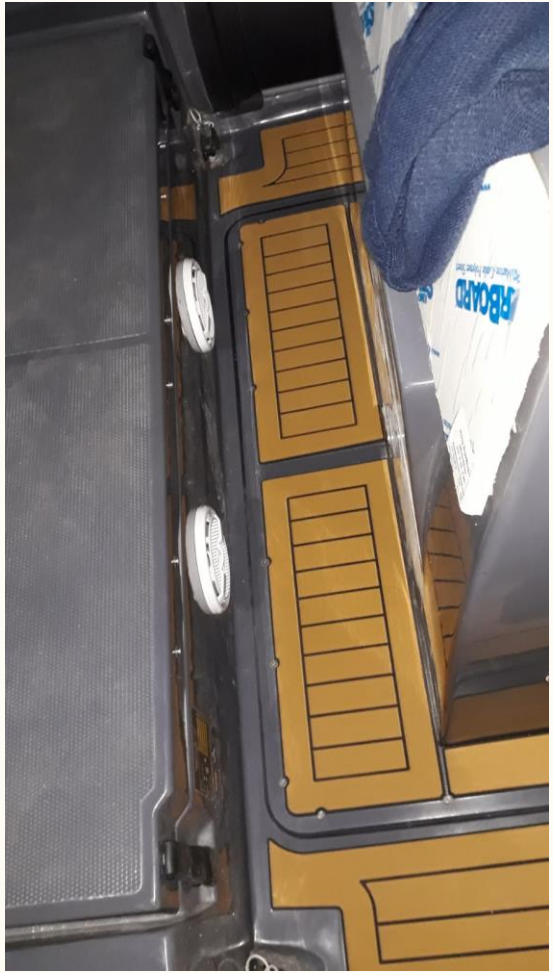

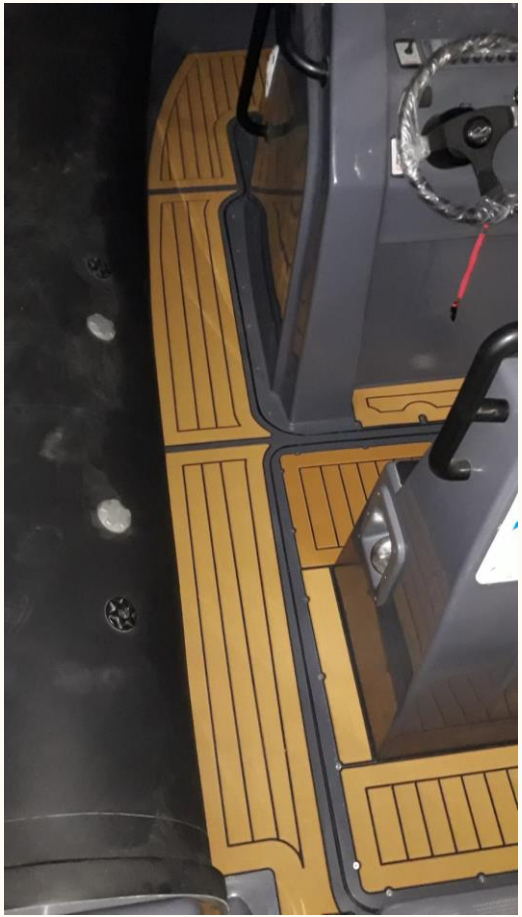

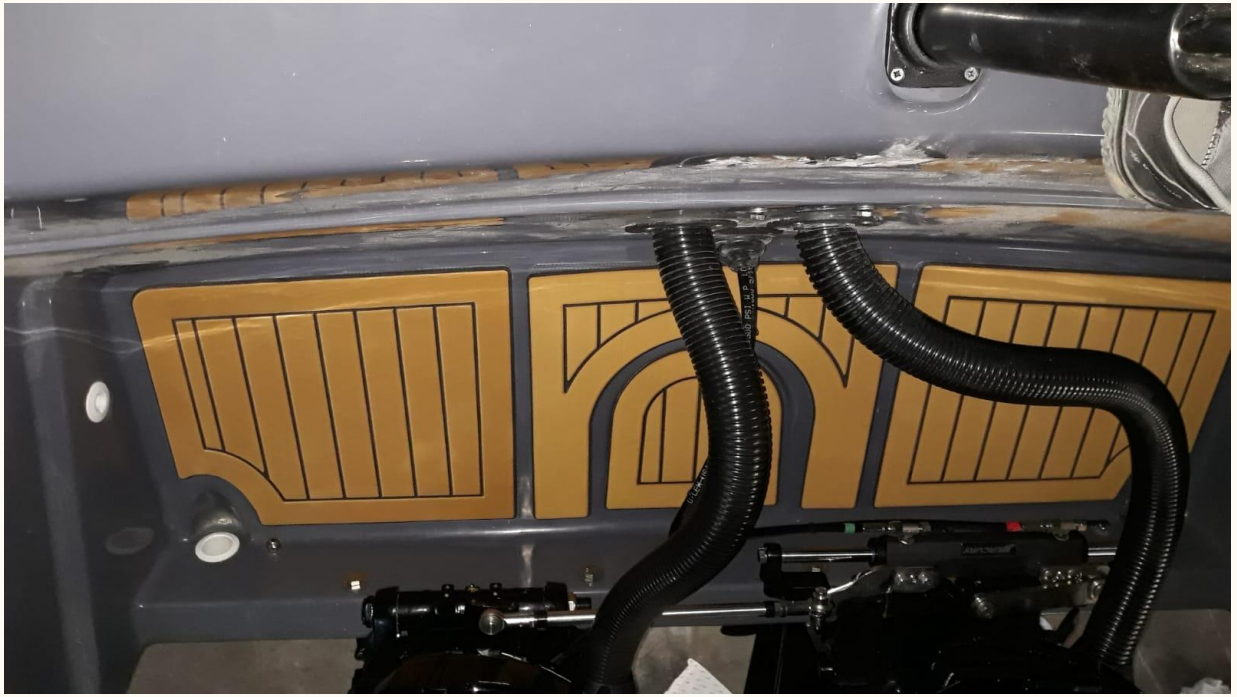

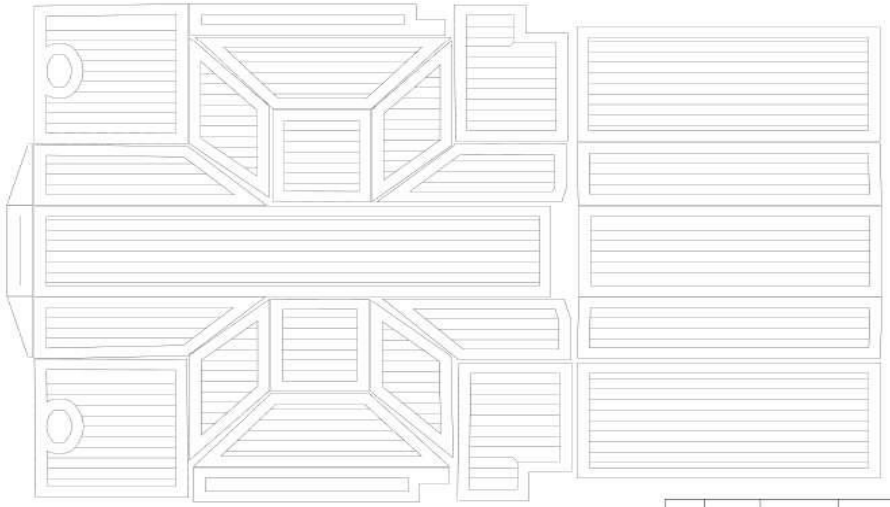

DINCOL REFIT

Dincol Refit LTD.
Kumbahoa mah. Tirhandil sok.
no:15 Bodrum -Muğla

TURKEY

www.dincolrefit.com
caner@dincolrefit.com
Tel +90.532.502 8679

M/Y KAYAMAN

GARAGE FLOORING

Drawn	Date	Scale	Project no.	Drawing no.
CANER DINCOL	20/04/2021	1:10	—	—
Checked	Copy Date	Filename	Size	
CANER DINCOL	—	KAYAMAN 01	A2R	

Thanks

Do you have any questions?

info@lerotec.com
+90 532 502 8679 +39 379 213 7218
www.lerotec.com

CREDITS: This presentation template was created by **Slidesgo**, including icons by **Flaticon** and infographics & images by **Freepik**